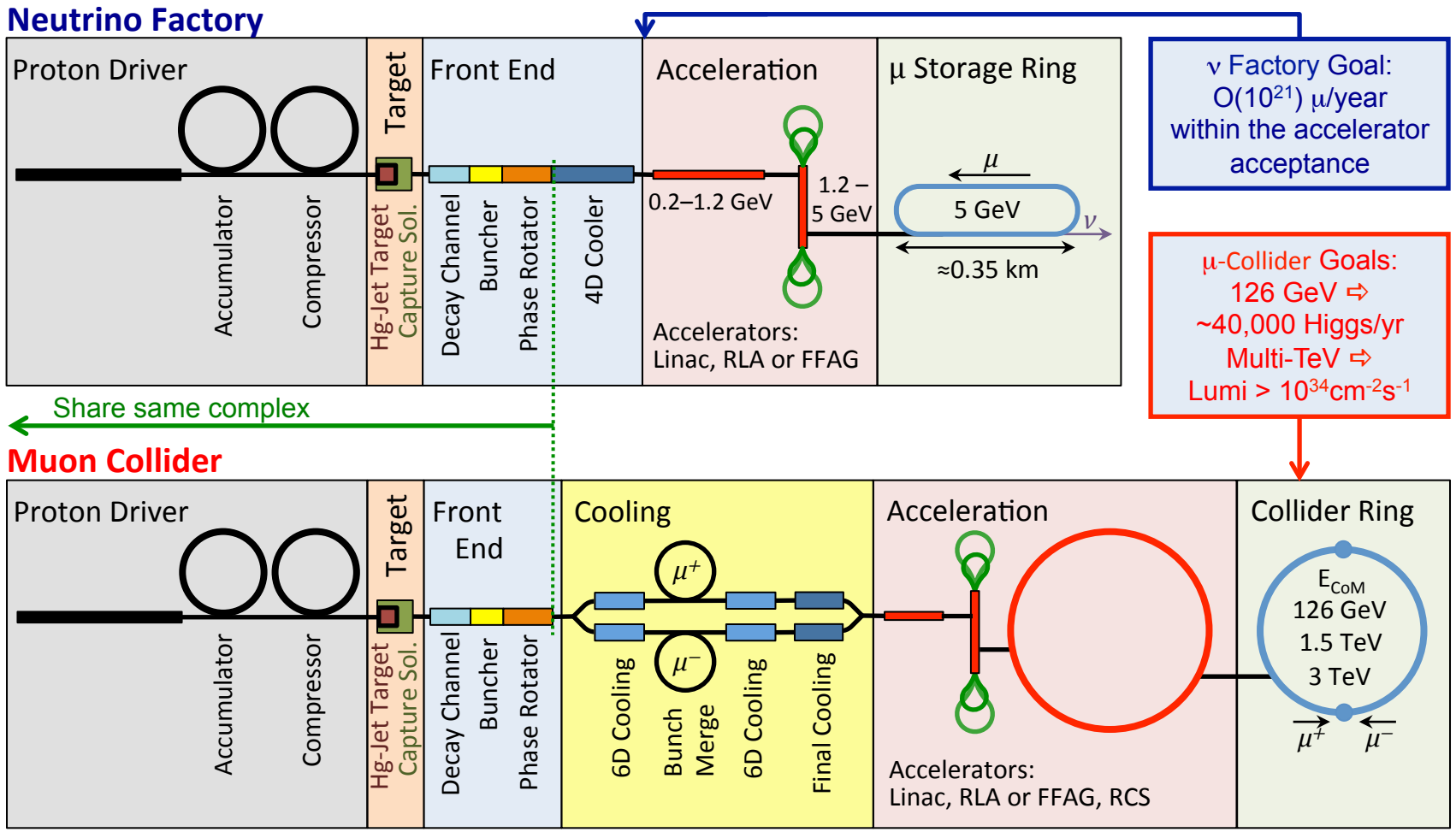
Neutrino Factory
Proton Driver
Accumulator
Compressor
Target
Hg-Jet Target
Capture Sol.
Front End
Decay Channel
Buncher
Phase Rotator
4D Cooler
Acceleration
0.2–1.2 GeV
1.2 – 5 GeV
Accelerators:
Linac, RLA or FFAG
μ Storage Ring
μ
5 GeV
ν
≈0.35 km
ν Factory Goal:
O(10^21) μ/year
within the accelerator acceptance
μ-Collider Goals:
126 GeV ⇨
~40,000 Higgs/yr
Multi-TeV ⇨
Lumi > 10^34 cm^-2 s^-1
Share same complex
Muon Collider
Proton Driver
Accumulator
Compressor
Target
Hg-Jet Target
Capture Sol.
Front End
Decay Channel
Buncher
Phase Rotator
Cooling
μ+
μ−
6D Cooling
Bunch Merge
6D Cooling
Final Cooling
Acceleration
Accelerators:
Linac, RLA or FFAG, RCS
Collider Ring
E_CoM
126 GeV
1.5 TeV
3 TeV
μ+
μ−